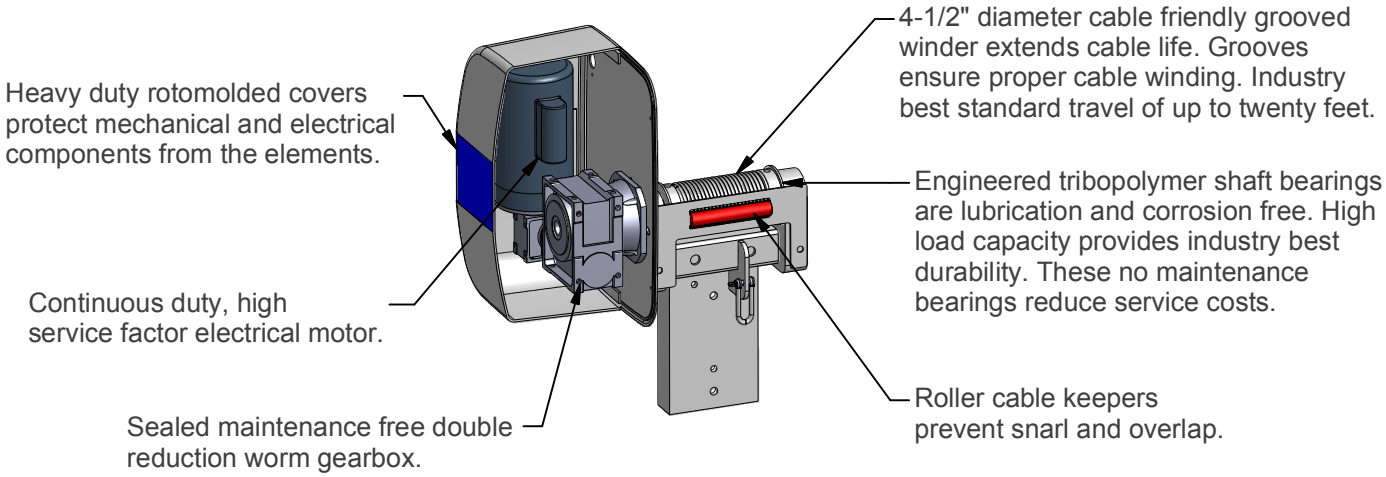
Heavy duty rotomolded covers protect mechanical and electrical components from the elements.
4-1/2" diameter cable friendly grooved winder extends cable life. Grooves ensure proper cable winding. Industry best standard travel of up to twenty feet.
Engineered tribopolymer shaft bearings are lubrication and corrosion free. High load capacity provides industry best durability. These no maintenance bearings reduce service costs.
Continuous duty, high service factor electrical motor.
Roller cable keepers prevent snarl and overlap.
Sealed maintenance free double reduction worm gearbox.

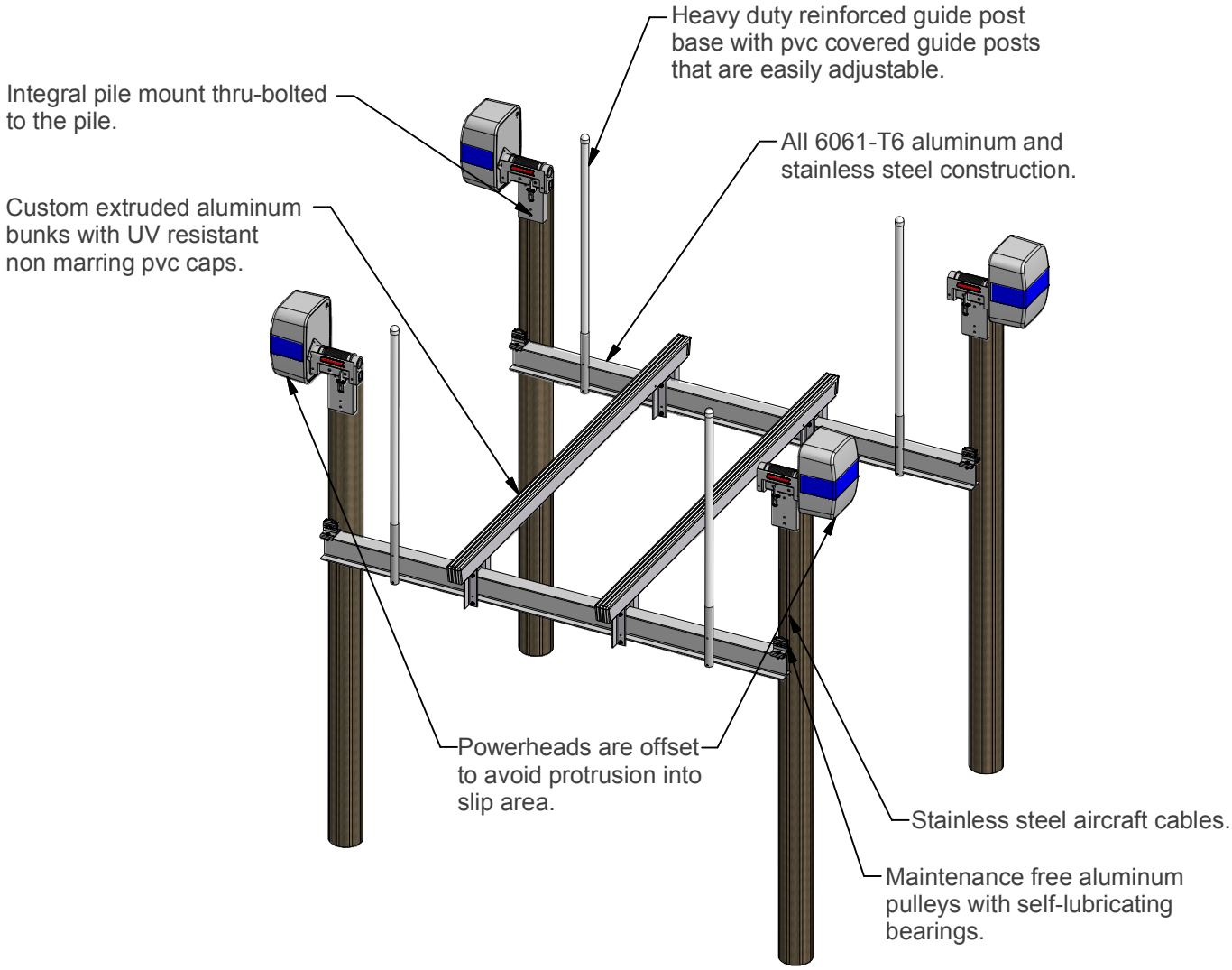
Heavy duty reinforced guide post base with pvc covered guide posts that are easily adjustable.
Integral pile mount thru-bolted to the pile.
All 6061-T6 aluminum and stainless steel construction.
Custom extruded aluminum bunks with UV resistant non marring pvc caps.
Powerheads are offset to avoid protrusion into slip area.
Stainless steel aircraft cables.
Maintenance free aluminum pulleys with self-lubricating bearings.