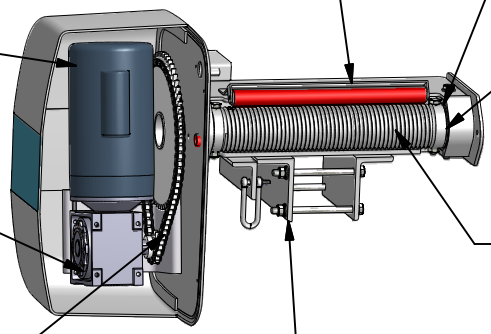

Roller cable keepers prevent snarl and overlap.

Engineered tribopolymer shaft bearings are lubrication and corrosion free. High load capacity provides industry best durability. These no maintenance bearings reduce service costs.

Continuous duty, high service factor electrical motor.

Depending on model, drive shaft is either heavy wall aluminum tube or heavy gauge high torque capacity drive tube with Gatorshield electro-plating to prevent corrosion.

Sealed maintenance free worm gearbox with heavy duty tapered roller bearings.

3-1/2" diameter cable friendly grooved winder extends cable life. Grooves ensure proper cable winding. Industry best standard travel of up to twenty feet.

Heavy duty chain supplies high shock load capability. A positive drive transmission, therefore no belt slippage as seen on inferior flat plate drives.

Easy install track mount brackets require no drilling.

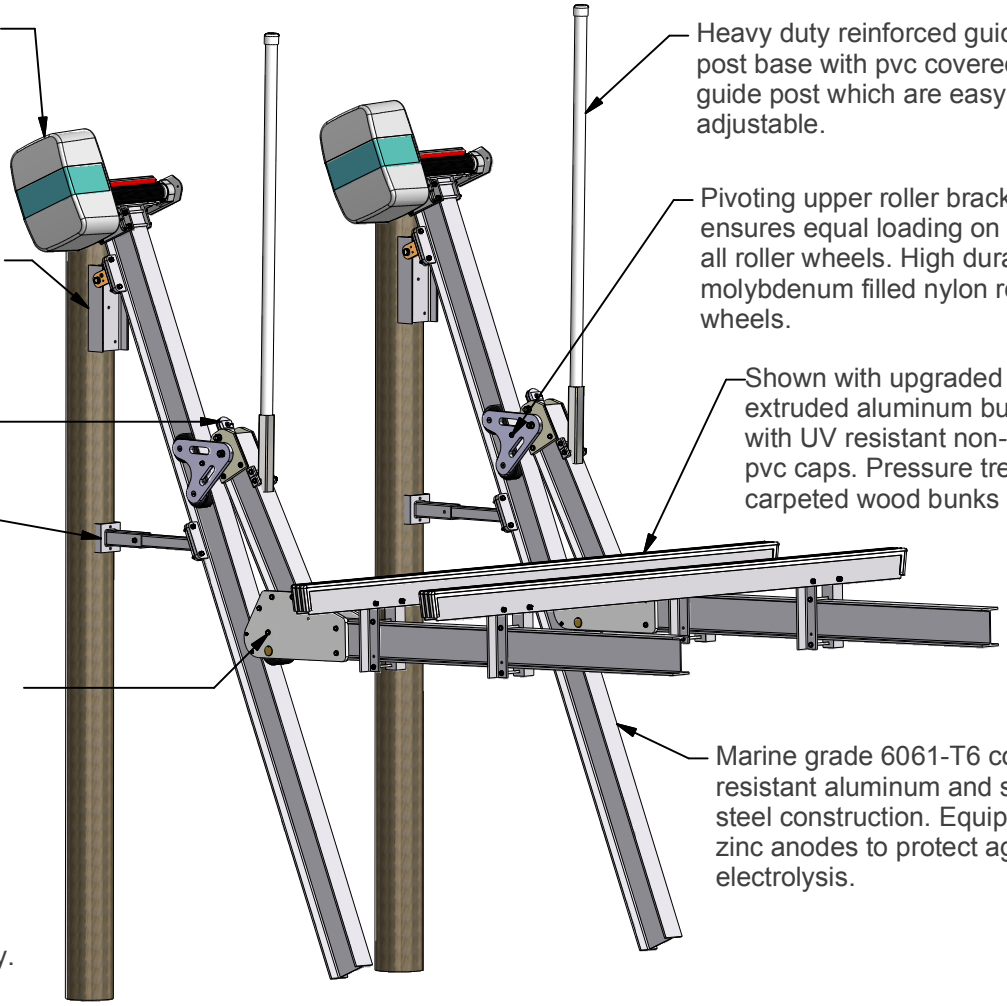

Heavy duty rotomolded covers protect mechanical and electrical components from the elements.

Heavy duty reinforced guide post base with pvc covered guide post which are easy adjustable.

Pivoting upper roller brackets ensures equal loading on all roller wheels. High durability molybdenum filled nylon roller wheels.

Thru-bolted pile mount bracket comes pre-assembled and allowsfor angular adjustment of the tracks.

Shown with upgraded custom extruded aluminum bunks with UV resistant non-marring pvc caps. Pressure treated fully carpeted wood bunks standard.

Maintenance free pulleys with self-lubricatiing bearings.

Telescoping track brace for easy install with varying track angles or support distances.

Our carriage arms use heavy duty 1" thick gusset plates in this critical joint area. These gussets have CNC machined grooves to provide structural support and ensure correct geometry of the carriage arms. We weld this joint and use reinforcing bolts to construct the strongest carriages in the industry.

Marine grade 6061-T6 corrosion resistant aluminum and stainless steel construction. Equipped with zinc anodes to protect against electrolysis.