**Alumavator**

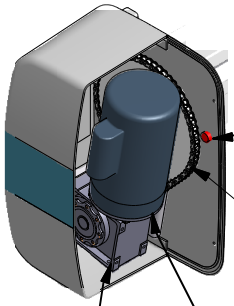

Maintenance port for easy chain lubrication

Heavy duty chain drive. No belt slippage or breakage as seen with obsolete flat plate drives.

Sealed, maintenance-free gearbox with heavy duty tapered roller bearings.

Continuous duty, high service factor electrical motor.

**Platinum**

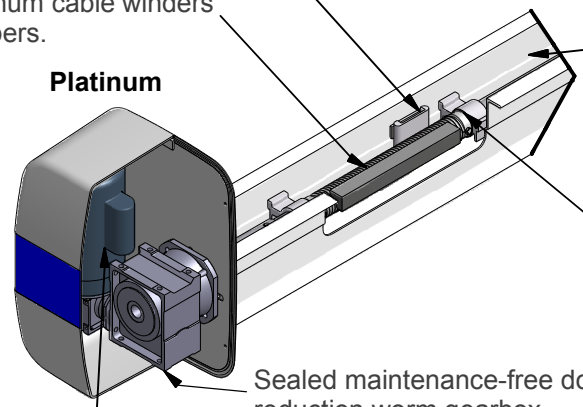

Patented wedge lock allows for easy cable adjustment.

Grooved aluminum cable winders with cable keepers.

Heavy gauge, high torque capacity drive tube with Gatorshield electro-plating to prevent corrosion.

Maintenance-free tribopolymer shaft bearings require no lube.

Sealed maintenance-free double reduction worm gearbox.

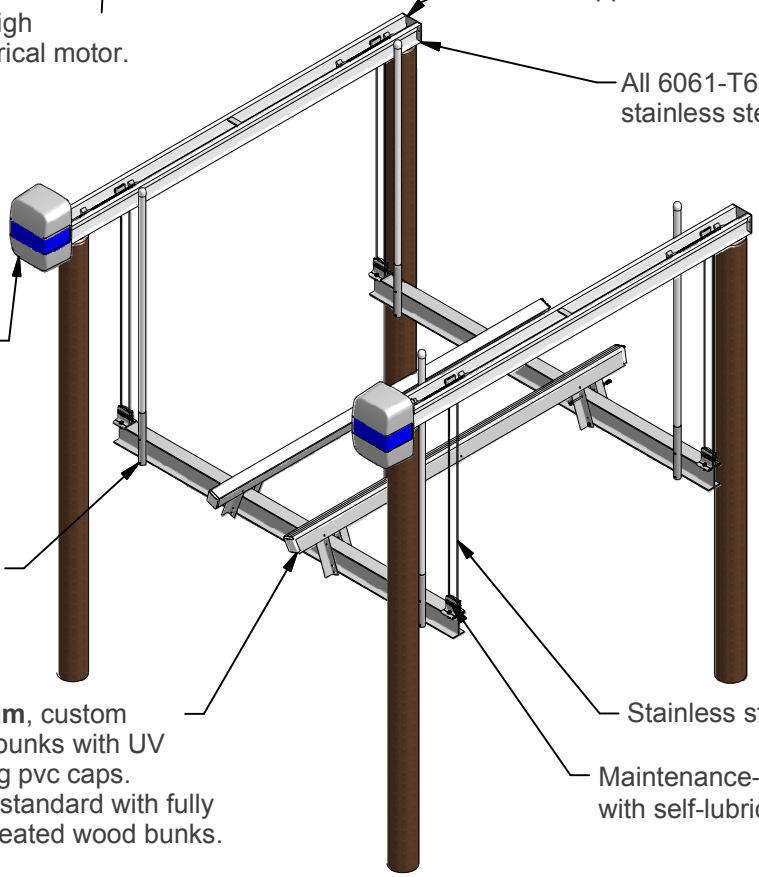

Custom extruded top beam stepped channels provide structural support for the bearing blocks.

All 6061-T6 aluminum and stainless steel construction.

Heavy duty rotomolded covers protect mechanical and electrical components from the elements.

Heavy duty reinforced guide post base with pvc covered guide posts that are easily adjustable.

Standard on **Platinum**, custom extruded aluminum bunks with UV resistant non-marring pvc caps. **Alumavator** comes standard with fully carpeted pressure treated wood bunks.

Stainless steel aircraft cables.

Maintenance-free aluminum pulleys with self-lubricating bearings.